RED120FTE64

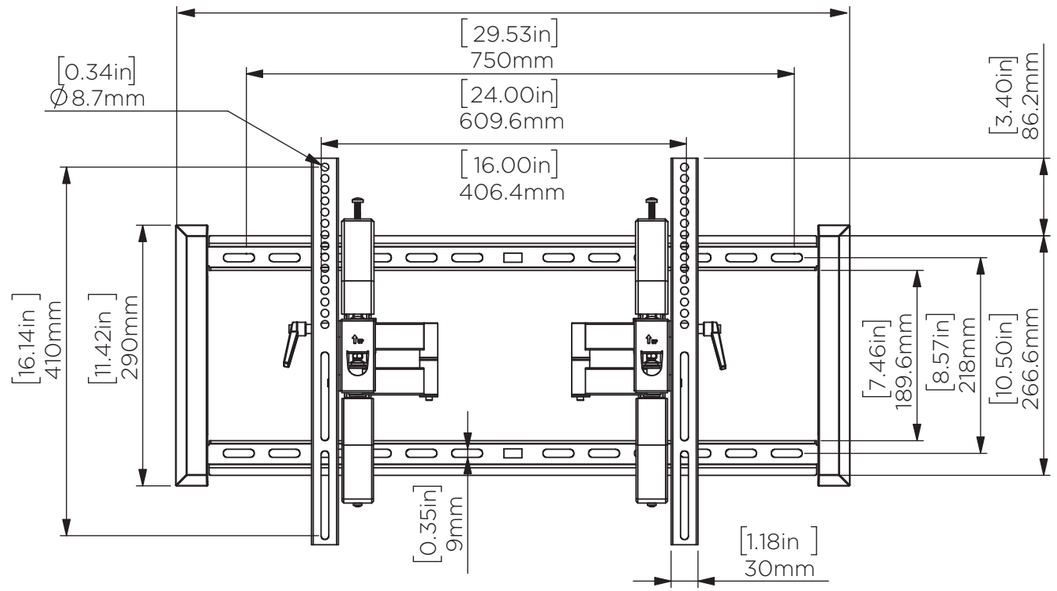

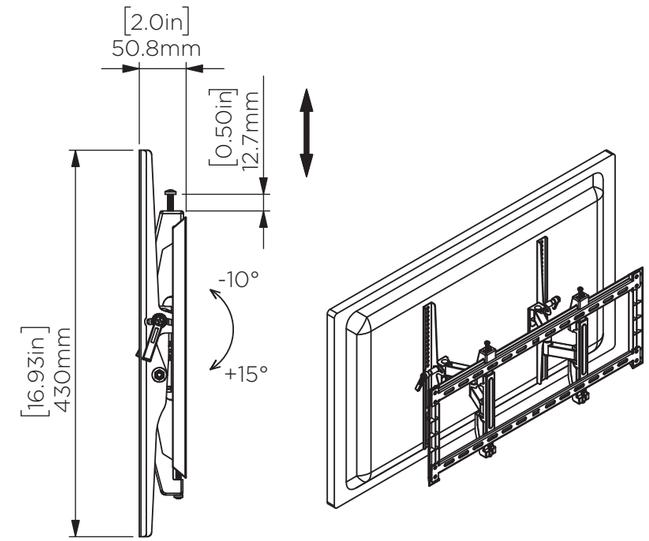

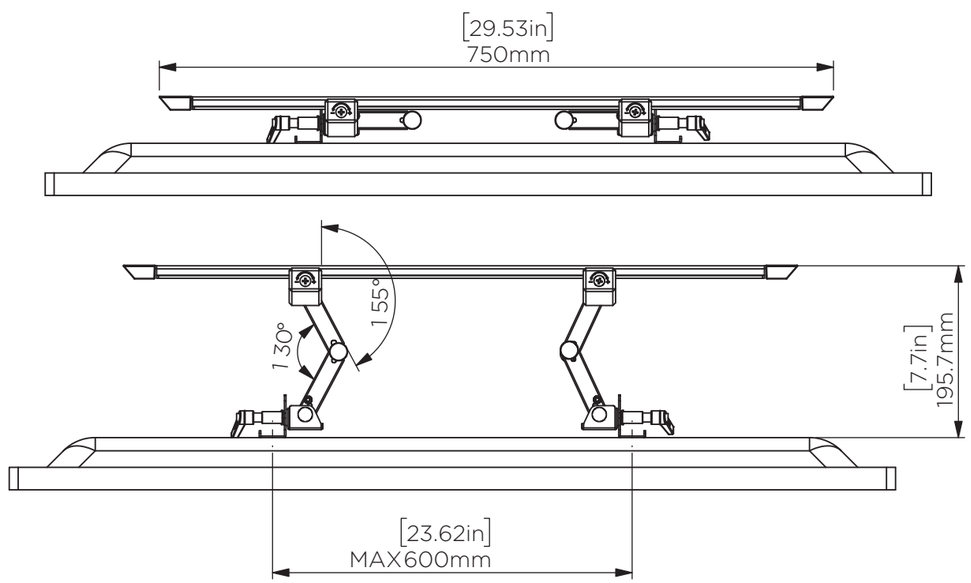

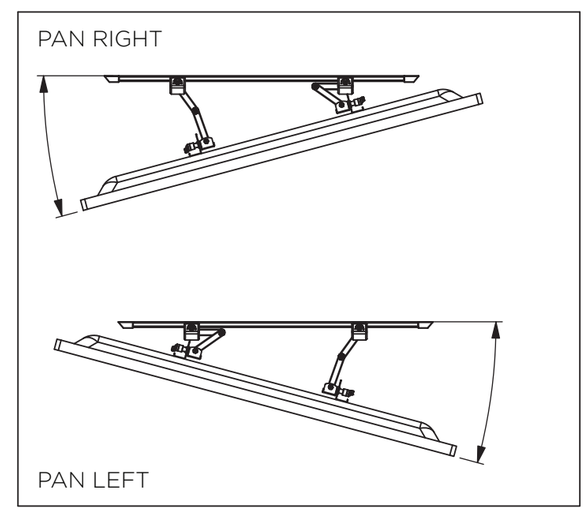

- SCREEN SIZE COMPATIBILITY: MOST 43" - 90" SCREENS
- VESA STANDARD COMPATIBILITY (WIDTH X HEIGHT): 200 X 100 TO 600 X 400 MM
- MAXIMUM VESA MOUNTING CONFIGURATION: 600 X 400 MM
- MAXIMUM WEIGHT CAPACITY: 120 LBS (54.4KG)
- VIEWING ANGLE: -10° to +15°
- PRODUCT COLOR: BLACK